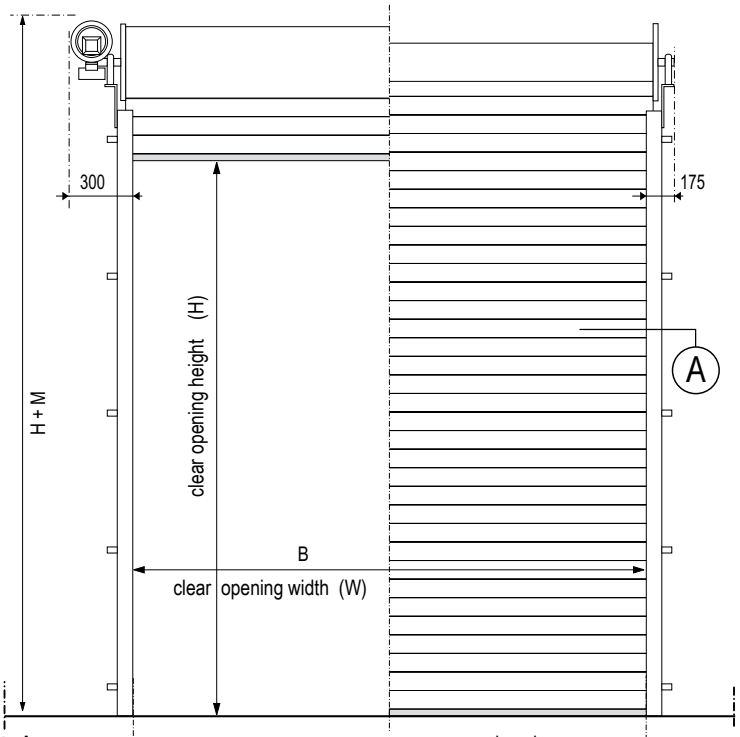

Front view

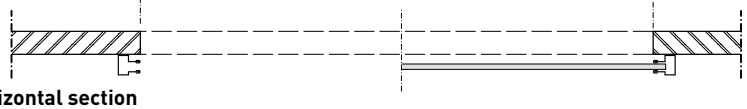

Horizontal section

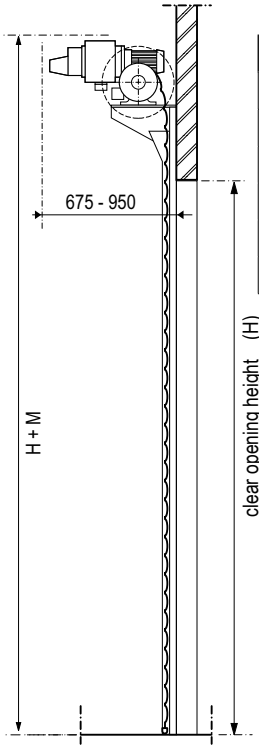

Total height	
H=6000	M=840
H=5000	M=795
H=4500	M=770
H=4000	M=670
H=3000	M=620
H=2000	M=570

vertical section

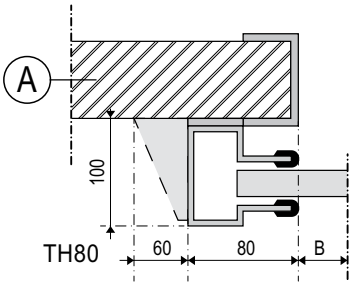

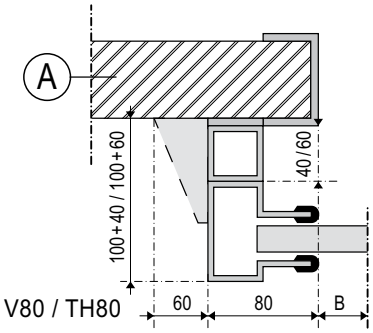

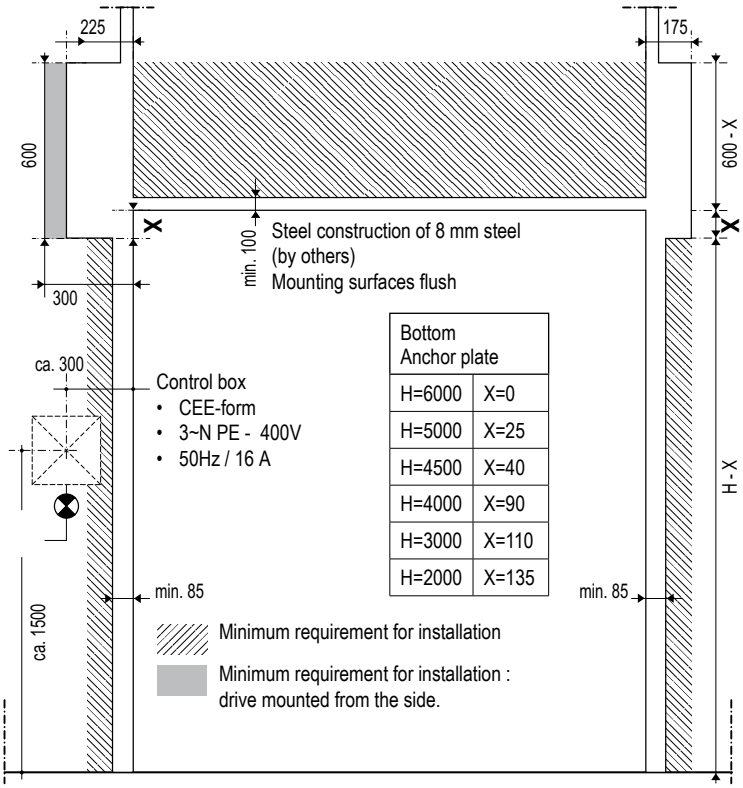

Bottom Anchor plate	
H=6000	X=0
H=5000	X=25
H=4500	X=40
H=4000	X=90
H=3000	X=110
H=2000	X=135

Installation requirements

technical alterations and printing errors reserved