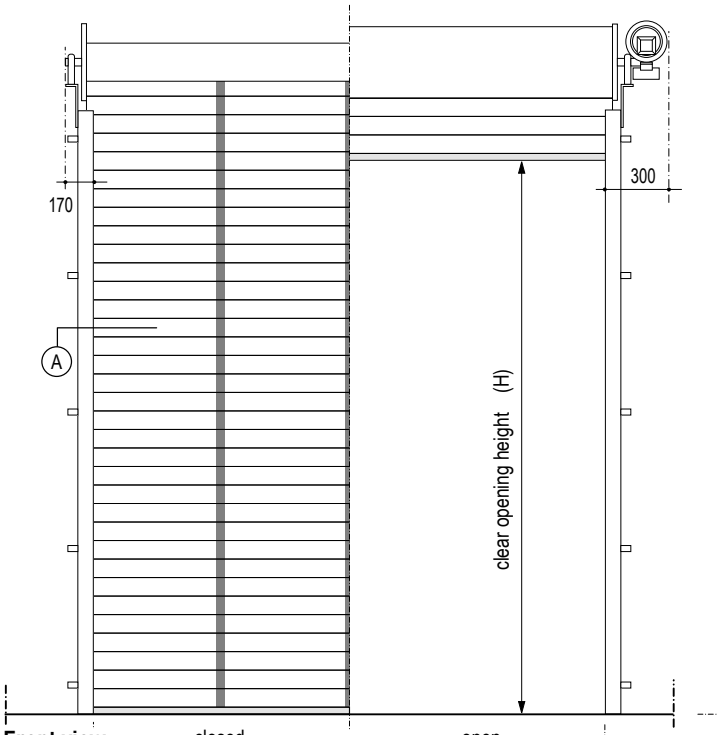

Front view

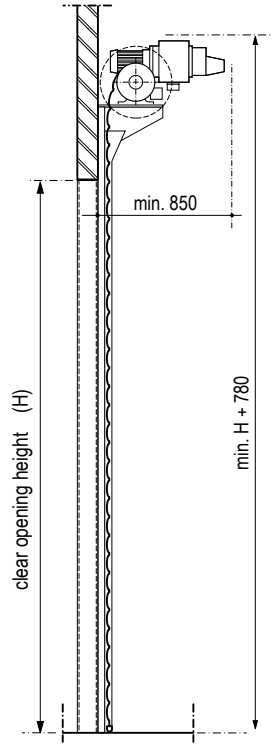

vertical section

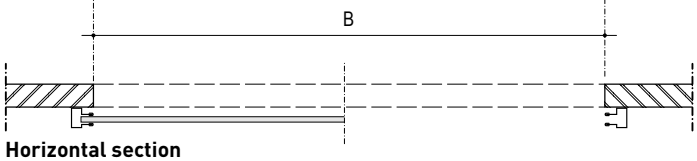

Horizontal section

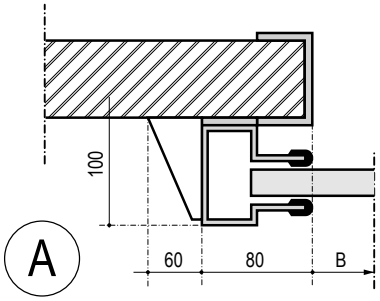

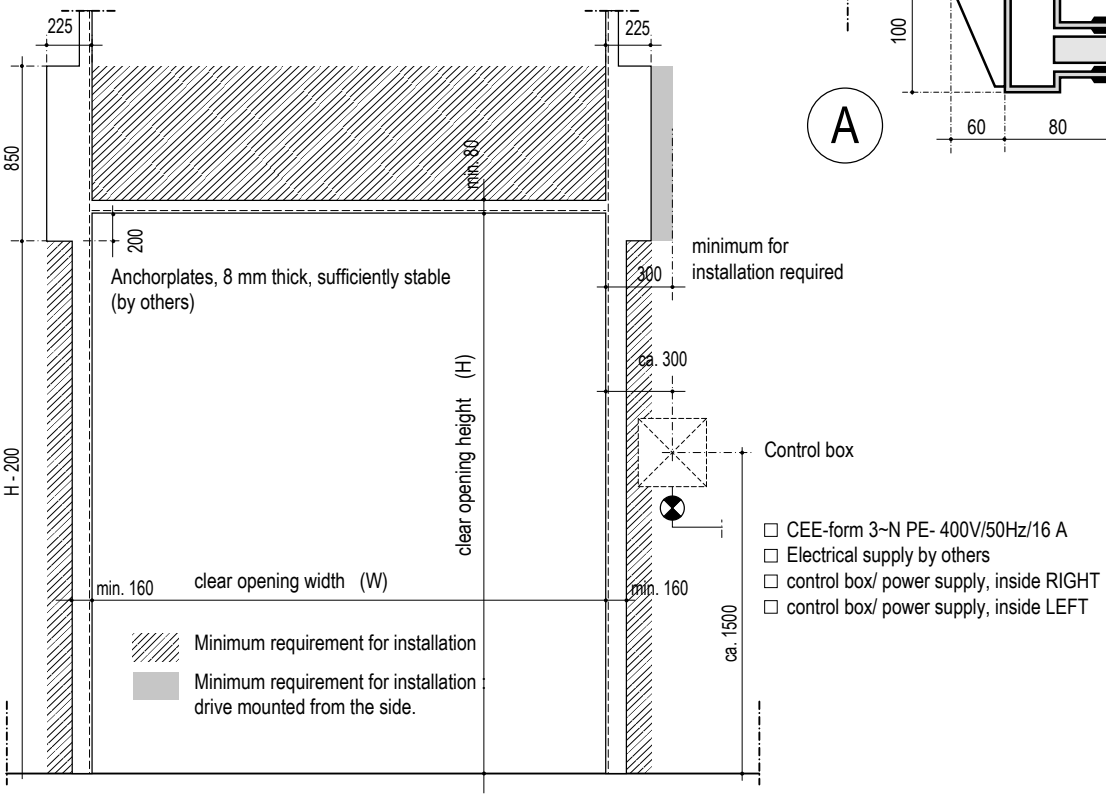

Installation requirements