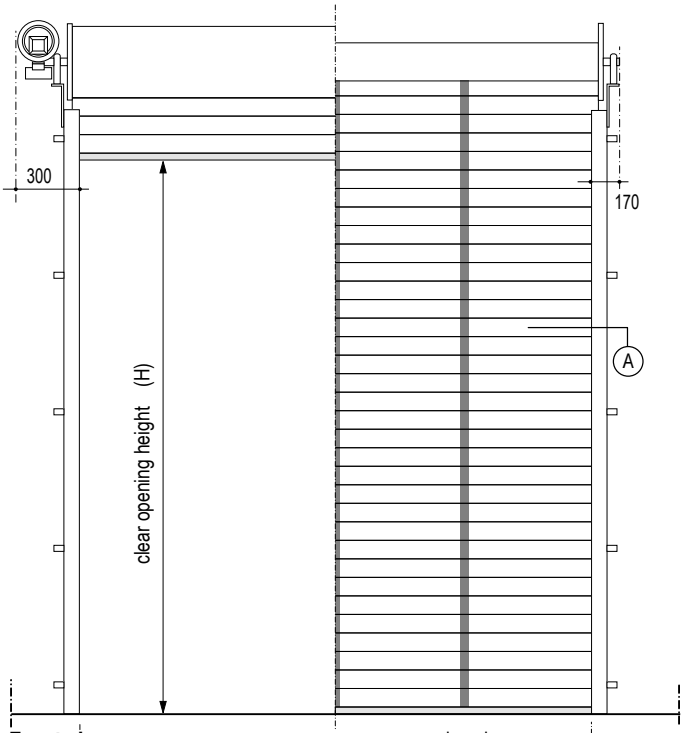

Front view open closed

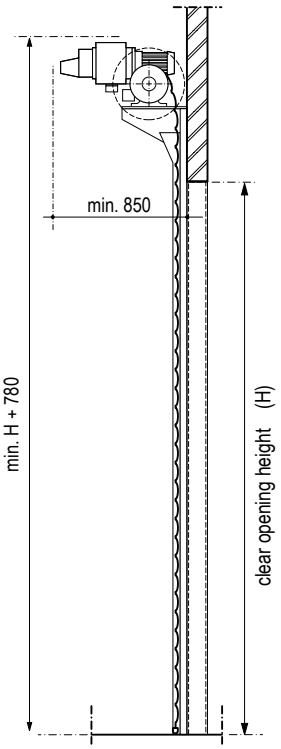

vertical section

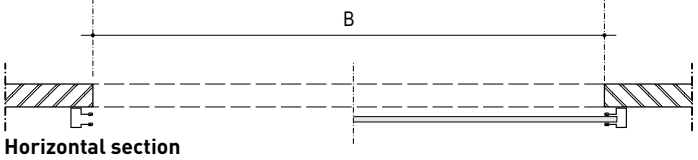

Horizontal section

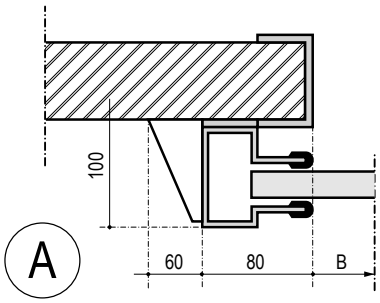

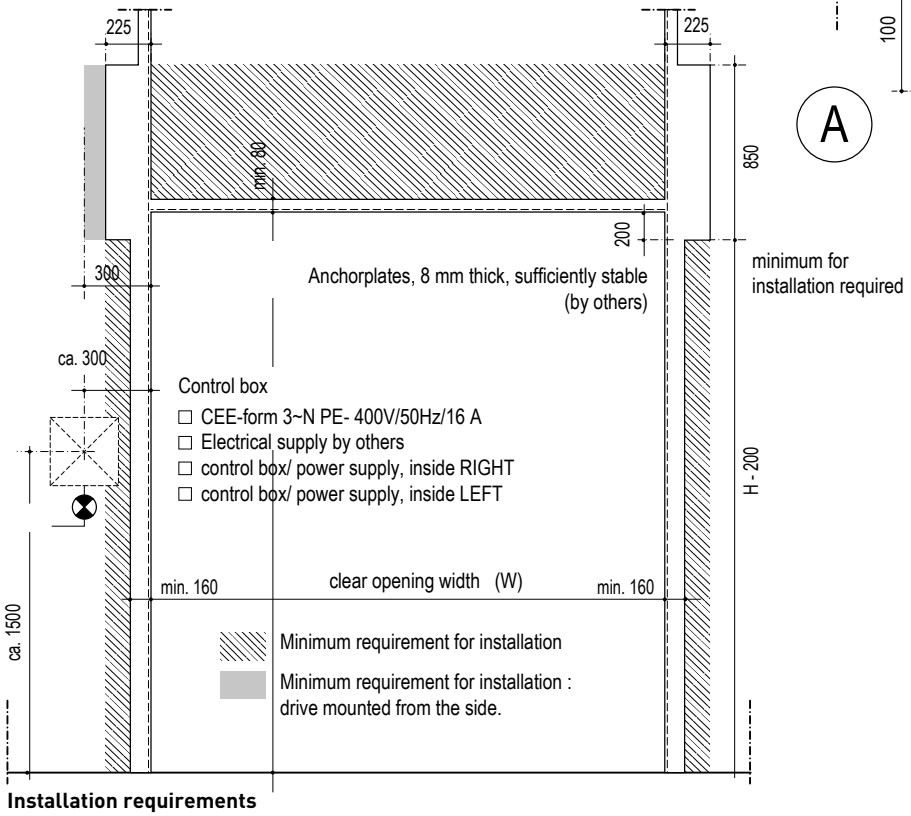

Installation requirements